EE-434 Power Electronics

Engr. Dr. Hadeed Ahmed Sher

Ghulam Ishaq Khan Institute of Engineering Sciences and Technology
Topi 23460, Pakistan

hadeed@giki.edu.pk

January 24, 2019

Overview

1. Electronic switches
   - Transistor
     - MOSFET
     - Bipolar Junction Transistor (BJT)

MOSFET

- It is a voltage controlled majority carrier device. $V_{GS} > V_{GS(min)}$ to turn on the device.
- The gate terminal is insulated from channel region using silicon oxide (SiO_2). this means input impedance (Z_{in}) is high so small gate power is required.. It is also called insulated-gate FET or IGFET. It has two types ; the depletion type and enhancement type.
- Power MOSFET are of enhancement type rather than depletion type.
- Typical ratings are 1500V and 600A at MHz range. Also available in low voltage high current rating (60V,1000A SEMIKRON)

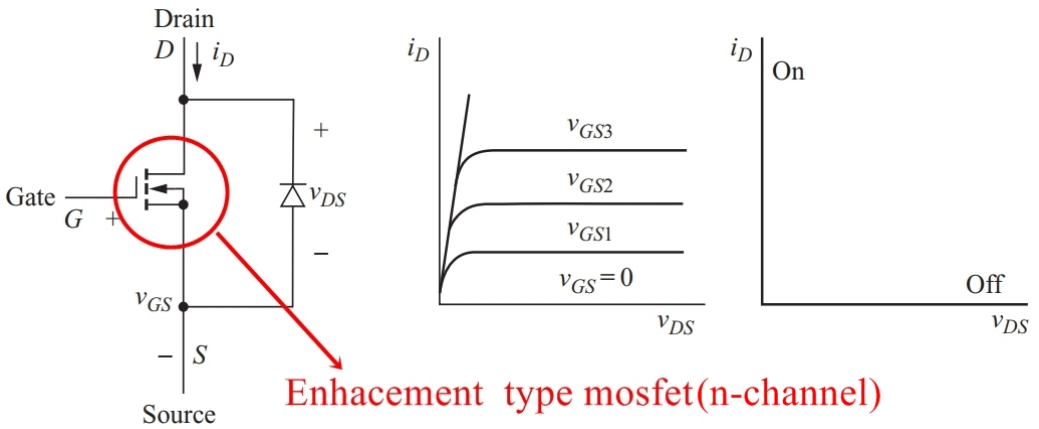

MOSFET

MOSFET has a inherent built-in internal body diode. It may not have the same switching speed as of MOSFET.
Connected between source and drain in anti-parallel direction.
MOSFET can block positive voltage and allow current to flow in negative (diode) and positive(MOSFET) directions. So it is a two quadrant device.
MOSFET has junction capacitance between gate to source, gate to drain and drain to source. The gate capacitance (source+drain) is called input capacitance and it is usually in pf. It plays a significant role in turning on a mosfet.

MOSFET| How to neutralize the body diode

If a high switching diode is required the effect of body diode (D_b) can be neutralized by connecting a diode(D_n) in series with the drain. Consequently the reverse current requires the fast switching diode(D_f) connected in anti-parallel direction.

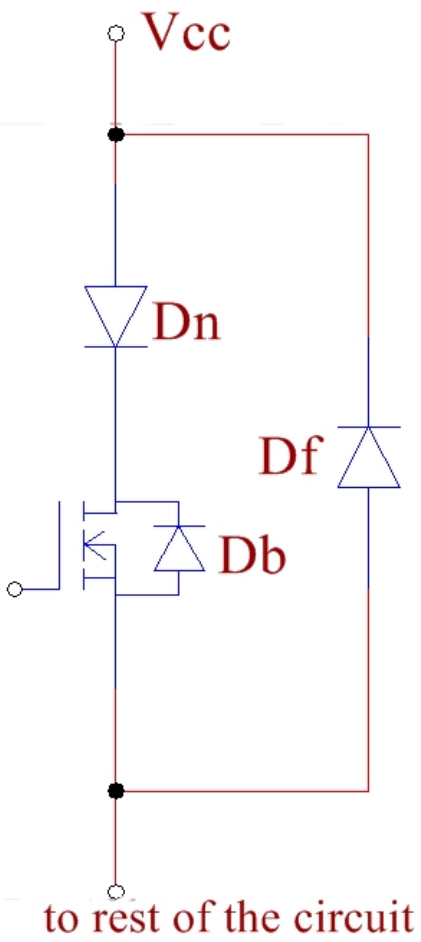

MOSFET | Operating limits and safe operating areas

- MOSFET has two voltage limits that should not be exceeded $V_{GS(max)}$ and BV_{DSS}.
- Typical $V_{GS(max)}$ are 20-30V.
- Note that even static charge can damage the mosfet.
- Usually zener protection is provided to the MOSFET to avoid exceeding $V_{GS(max)}$.

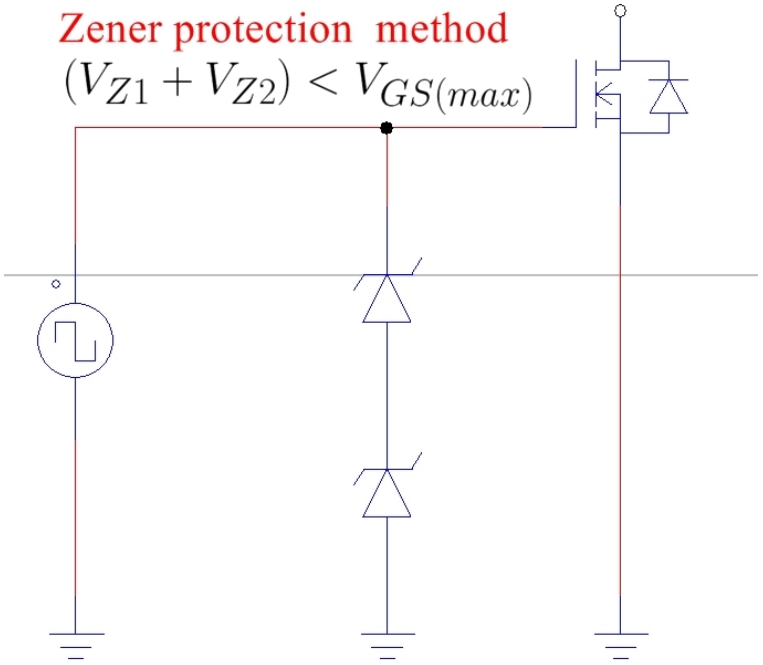

MOSFET | Losses

MOSFET has on state power losses given as

$$P_{on} = I_o^2 R_{DS(on)} \tag{1}$$

The resistance $R_{DS(on)}$ increases with increase in junction temperature. This means they have a positive temperature coefficient which is good for parallel operation.
Therefore, the on-state losses will increase with temperature in most power electronic applications.

MOSFET | Paralleling of MOSFET

MOSFET's positive temperature coefficient is good as it provides thermal stabilization effect.

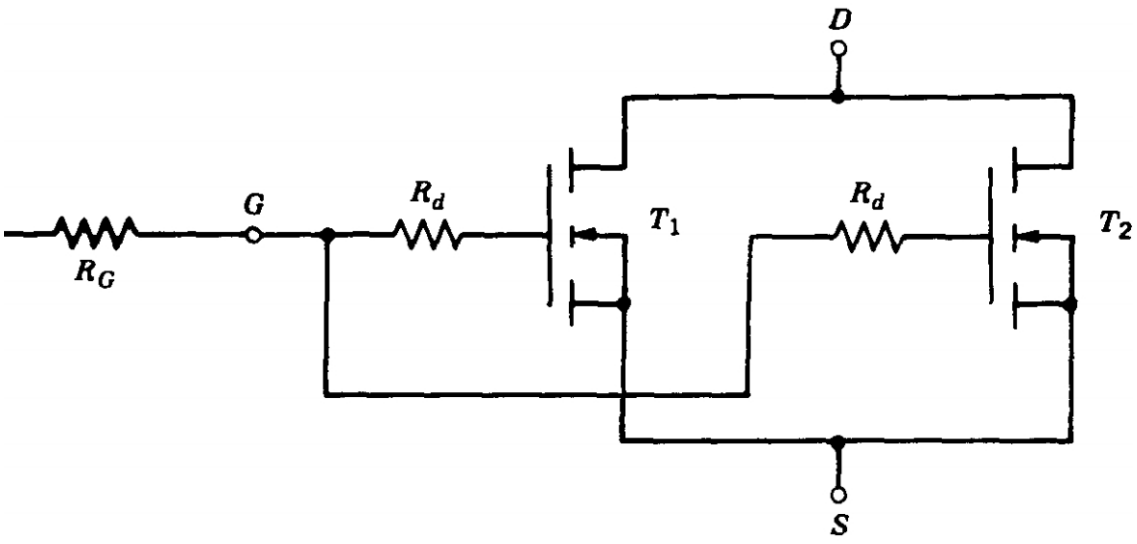

For same jucntion temperature if $R_{DS(on)}$ of T_2 exceeds T_1, then T_1 will have higher current and therefore higher on state losses than T_2.
This will increase the junction temperature of T_1 and therefore $R_{DS(on)}$.
This will decrease the current and hence, there is a thermal stabilization effect.

MOSFET | Gate connection of MOSFET

MOSFET's gate input are highly capacitive with almost zero losses.
Off course stray inductance is always there.

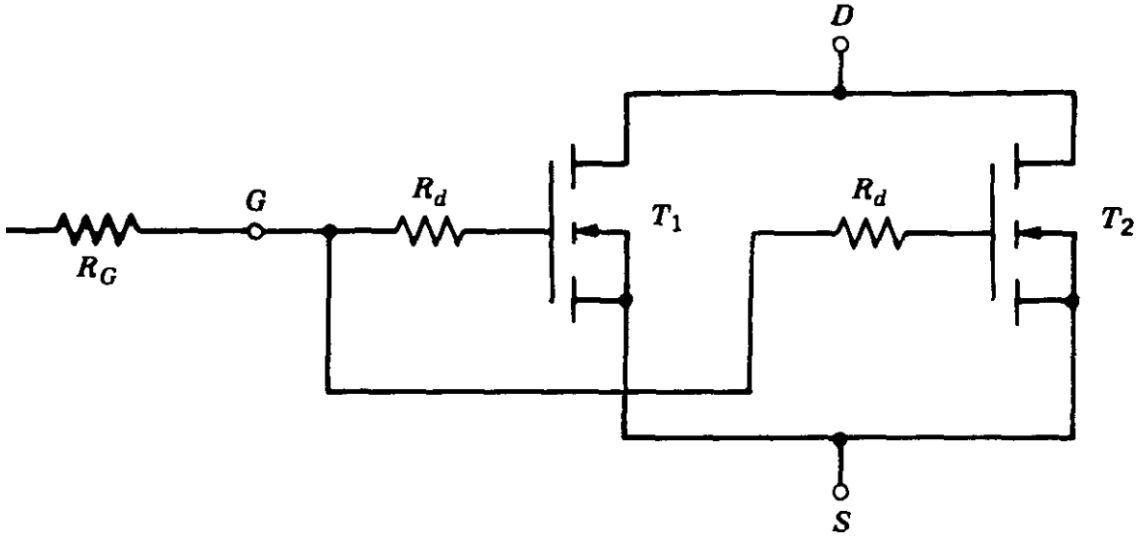

This LC combination creates unwanted high frequency oscillations in MOSFET.
A small resistance is usually used in series with the individual gate connections to dampen these oscillations.

MOSFET | Safe operating area (SOA)

SOA of mosfet depends on maximum drain current I_{DM}, the internal junction temperature T_j and breakdown voltage BV_{DSS}. gate input are highly capacitive with almost zero losses.
Off course stray inductance is always there.

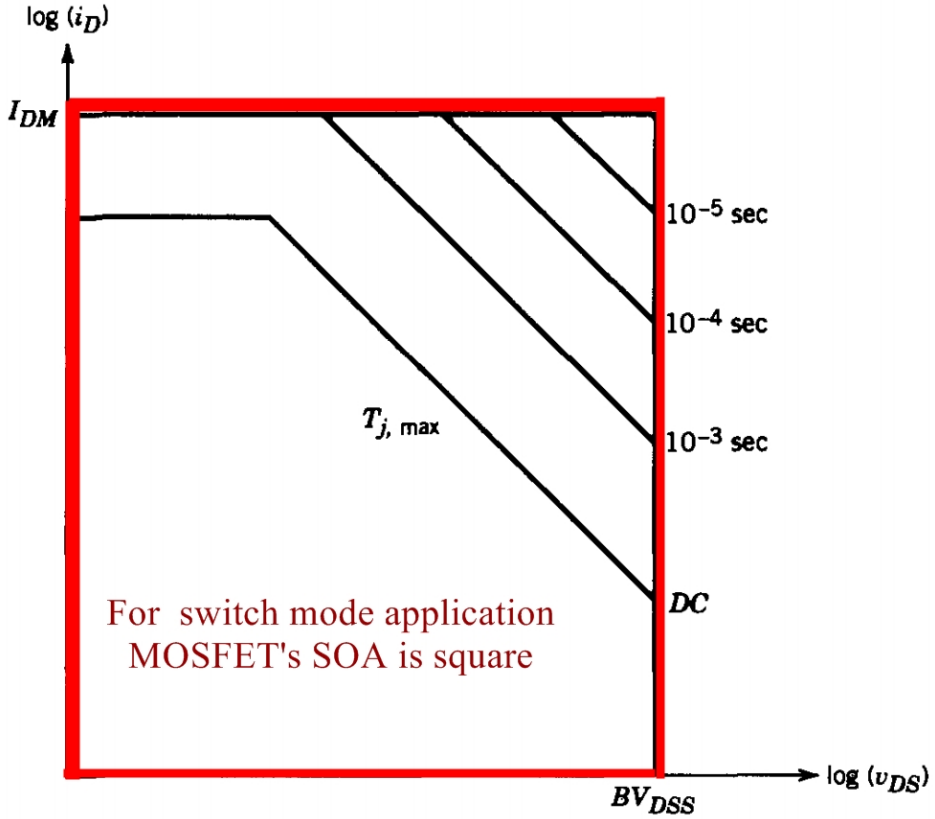

International
IOR Rectifier

PD - 94053

IRFZ44N

HEXFET® Power MOSFET

- Advanced Process Technology
- Ultra Low On-Resistance
- Dynamic dv/dt Rating
- 175°C Operating Temperature
- Fast Switching
- Fully Avalanche Rated

important for inductive circuits

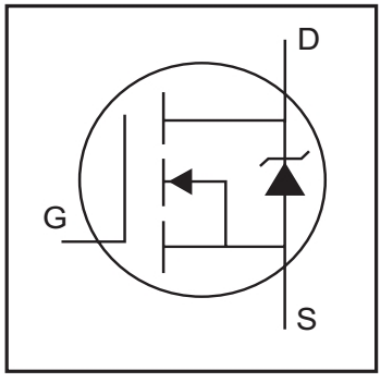

V_{DSS} = 55V

$R_{DS(on)}$ = 17.5mΩ

I_D = 49A

Related to on state loss

Description

Advanced HEXFET® Power MOSFETs from International Rectifier utilize advanced processing techniques to achieve extremely low on-resistance per silicon area. This benefit, combined with the fast switching speed and ruggedized device design that HEXFET power MOSFETs are well known for, provides the designer with an extremely efficient and reliable device for use in a wide variety of applications.

The TO-220 package is universally preferred for all commercial-industrial applications at power dissipation levels to approximately 50 watts. The low thermal resistance and low package cost of the TO-220 contribute to its wide acceptance throughout the industry.

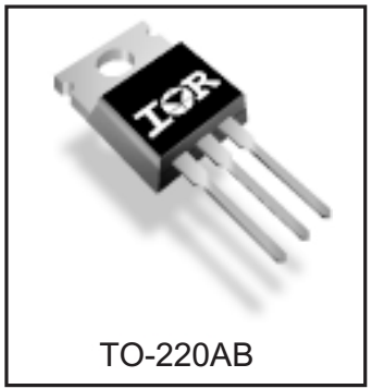

MOSFET | Understanding the datasheet

Absolute Maximum Ratings

	Parameter	Max.	Units
I_D @ T_C = 25°C	Continuous Drain Current, V_{GS} @ 10V	49	A
I_D @ T_C = 100°C	Continuous Drain Current, V_{GS} @ 10V	35	
I_{DM}	Pulsed Drain Current ①	160	
P_D @T_C = 25°C	Power Dissipation	94	W
	Linear Derating Factor	0.63	W/°C
V_{GS}	Gate-to-Source Voltage	± 20	V
I_{AR} ^	Avalanche Current①	25	A
E_{AR}	Repetitive Avalanche Energy① Higher the better	9.4	mJ
dv/dt	Peak Diode Recovery dv/dt ③	5.0	V/ns
T_J T_{STG}	Operating Junction and Storage Temperature Range	-55 to + 175	°C
	Soldering Temperature, for 10 seconds	300 (1.6mm from case)	
	Mounting torque, 6-32 or M3 srew	10 lbf•in (1.1N•m)	

^related to unclamped inductive circuit

Thermal Resistance

	Parameter	Typ.	Max.	Units
$R_{\theta JC}$	Junction-to-Case	——	1.5	°C/W
$R_{\theta CS}$	Case-to-Sink, Flat, Greased Surface	0.50	——	
$R_{\theta JA}$	Junction-to-Ambient	——	62	

www.irf.com

MOSFET | Understanding the datasheet

Electrical Characteristics @ T_J = 25°C (unless otherwise specified)

	Parameter	Min.	Typ.	Max.	Units	Conditions
$V_{(BR)DSS}$	Drain-to-Source Breakdown Voltage	55	—	—	V	V_{GS} = 0V, I_D = 250μA
$\Delta V_{(BR)DSS}/\Delta T_J$	Breakdown Voltage Temp. Coefficient	—	0.058	—	V/°C	Reference to 25°C, I_D = 1mA
$R_{DS(on)}$	Static Drain-to-Source On-Resistance	—	—	17.5	mΩ	V_{GS} = 10V, I_D = 25A ④
$V_{GS(th)}$	Gate Threshold Voltage	2.0	—	4.0	V	V_{DS} = V_{GS}, I_D = 250μA
g_{fs}	Forward Transconductance	19	—	—	S	V_{DS} = 25V, I_D = 25A④
I_{DSS}	Drain-to-Source Leakage Current	—	—	25	μA	V_{DS} = 55V, V_{GS} = 0V
		—	—	250		V_{DS} = 44V, V_{GS} = 0V, T_J = 150°C
I_{GSS}	Gate-to-Source Forward Leakage	—	—	100	nA	V_{GS} = 20V
	Gate-to-Source Reverse Leakage	—	—	-100		V_{GS} = -20V
Q_g	Total Gate Charge	—	—	63	nC	I_D = 25A
Q_{gs}	Gate-to-Source Charge	—	—	14		V_{DS} = 44V
Q_{gd}	Gate-to-Drain ("Miller") Charge	—	—	23		V_{GS} = 10V, See Fig. 6 and 13
$t_{d(on)}$	Turn-On Delay Time	—	12	—	ns	V_{DD} = 28V
t_r	Rise Time	—	60	—		I_D = 25A
$t_{d(off)}$	Turn-Off Delay Time	—	44	—		R_G = 12Ω
t_f	Fall Time	—	45	—		V_{GS} = 10V, See Fig. 10 ④
L_D	Internal Drain Inductance	—	4.5	—	nH	Between lead, 6mm (0.25in.) from package and center of die contact 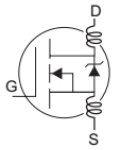
L_S	Internal Source Inductance	—	7.5	—		
C_{iss}	Input Capacitance	—	1470	—	pF	V_{GS} = 0V
C_{oss}	Output Capacitance	—	360	—		V_{DS} = 25V
C_{rss}	Reverse Transfer Capacitance	—	88	—		f = 1.0MHz, See Fig. 5
E_{AS}	Single Pulse Avalanche Energy②	—	530⑤	150⑥	mJ	I_{AS} = 25A, L = 0.47mH

Important for gate driver circuit design

device fails beyond these values

MOSFET | Understanding the datasheet

E_{AS}	Single Pulse Avalanche Energy②	——	530⑤	150⑥	mJ	I_{AS} = 25A, L = 0.47mH

E_{AS} represents the results of avalanche test which certifies the maximum limit of a mosfet to absorb the energy trapped in an unclamped inductive circuit.

The procedure is as follows

A DC source is connected to a mosfet drain to source with a series inductance L connected with drain. The leakage drain current is measured before and after the gate signal is applied. If the leakage drain current after the gate pulse is removed exceeds the leakage current of drain before the gate pulse is applied then the mosfet fails the text. If not, the dc voltage is increased to increase the current. Usually the maximum current value as well as inductance value is specified on the datasheet as shown above.

As a thumb rule, high current and small inductance makes a stressful test.

MOSFET | Understanding the datasheet

Source-Drain Ratings and Characteristics

	Parameter	Min.	Typ.	Max.	Units	Conditions
I_S	Continuous Source Current (Body Diode)	—	—	49	A	MOSFET symbol showing the integral reverse p-n junction diode. 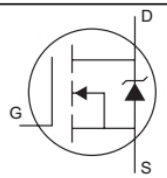
I_{SM}	Pulsed Source Current (Body Diode)①	—	—	160		
V_{SD}	Diode Forward Voltage	—	—	1.3	V	T_J = 25°C, I_S = 25A, V_{GS} = 0V ④
t_{rr}	Reverse Recovery Time	—	63	95	ns	T_J = 25°C, I_F = 25A
Q_{rr}	Reverse Recovery Charge	—	170	260	nC	di/dt = 100A/μs ④
t_{on}	Forward Turn-On Time	Intrinsic turn-on time is negligible (turn-on is dominated by L_S+L_D)				

Method to neutralize the body diode has already been presented. Note that for some applications,the designer may require a diode with superior switching characteristics.

Bipolar Junction Transistor (BJT)

- It is an active single quadrant switch i.e., a current controlled device. $I_b > I_{b(min)}$
- Collector emitter saturation voltage is typically 1-2V for a power BJT.
- Work as a fixed saturation voltage device and therefore offers low on state losses compared to mosfet.
- Power BJT suffer from low values of beta and therefore, Darlington pair is often used
- Not much used in modern PE applications. Because for low voltage applications it is replaced by MOSFET and for high power it is replaced by IGBT.

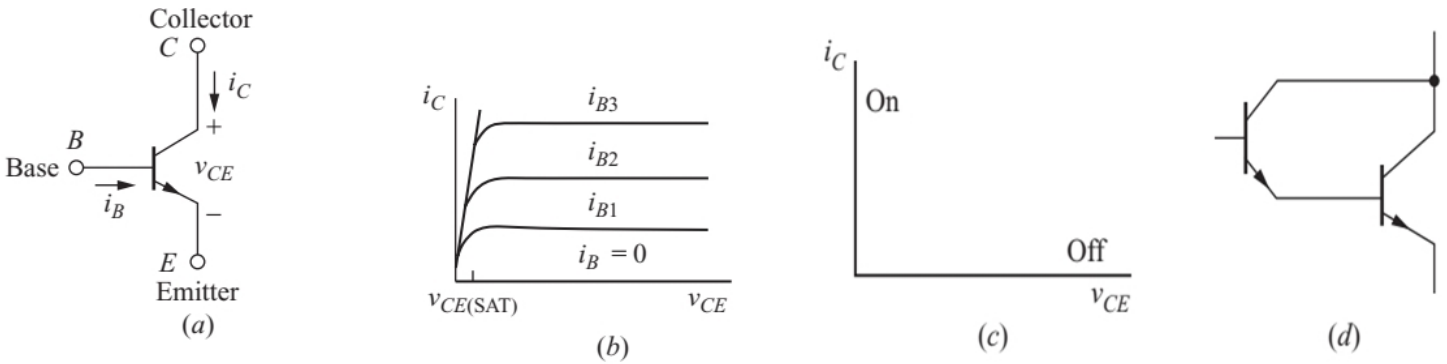

Comparison of electronic switches

Device	**Quadrant operation**	**Voltage blocking**	**Current flow**	Control	Remarks
Diode	1	Reverse	forward	No	
Thyristor	2	Both	forward	Yes	
Mosfet	2	Positive	Both	Yes	On state loss is higher than BJT
BJT				Yes	
IGBT				Yes	

Table: Summary of power electronic semiconductors